S-TADPOLE Throttle Architecture Draft

Pablo Plata

Aeronautical and Astronautical Engineering
Purdue University
PSP - Active Controls

March 25, 2026

Chapter 1

Controller Implementation

1.1 General Outline

The SuperTADPOLE (S-TADPOLE) Controller architecture follows a Lead / Follow valve system, where the oxidizer valve (lead valve) is in charge of tracking the chamber pressure targets emitted by the flight controller. The fuel valve's (follow valve) only task it to maintain a constant mixture ratio, by using the oxidizer circuit pressures to determine it's own pressure targets accordingly. This de-coupling of tasks allows for a more robust throttle system. Shown below is the control system diagram for the proposed system.
All calculation steps are represented by gray boxes. All variables with a superscript of **cmd** indicate a commanded target, all superscripts of **m** indicate a measured propriety.

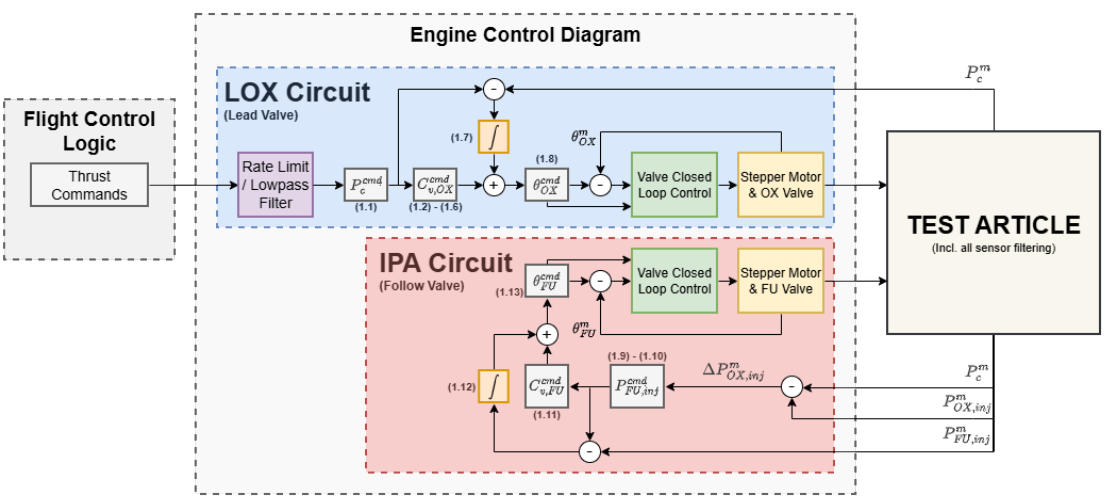

Figure 1.1: S-TADPOLE controls system diagram

1.2 Oxidizer Circuit

The upstream flight control law emits raw, unfiltered thrust commands which are fed into the engine controller. The engine controller rate limits these inputs. The first math block processes these thrust commands and produces chamber pressure targets via:

$$\begin{aligned} F_T &= P_c A_t c_f \\ P_c^{cmd} &= \frac{F_T}{A_t c_f} \end{aligned} \tag{1.1}$$

We work backwards form the chamber pressure to injector pressure since chamber pressure is a function of total massflow:

$$\begin{aligned} P_c^{cmd} &= \frac{\dot{m}_{tot} \cdot c^*}{A_t} \\ \dot{m}_{tot} &= \frac{P_c A_t}{c^*} \end{aligned} \tag{1.2}$$

Note that our characteristic velocity $c^* = f(P_c)$ changes with chamber pressure due to changing combustion efficiency. During engine operation, we will use a mapping obtained during characterization to define $c^* = f(P_c^m)$. and look-up the correct value via a Pressure Transducer in the chamber. We can now use our constant OF ratio target of **1.2** to solve for the oxidizer massflow required to meet the chamber pressure.

$$\dot{m}_{OX}^{cmd} = \dot{m}_{tot} \cdot \frac{OF}{OF+1} \tag{1.3}$$

Treating the oxidizer injector as an orifice, we can then use the orifice flow equation and it follows that:

$$\begin{aligned} \dot{m}_{OX}^{cmd} &= (C_d A)_{OX} \sqrt{2[P_{inj,OX} - P_c] \cdot \rho_{OX}} \\ P_{inj,OX}^{cmd} &= P_c^{cmd} + \frac{(\dot{m}_{OX}^{cmd})^2}{2 \cdot \rho_{OX} \cdot (C_d A)_{OX}^2} \end{aligned} \tag{1.4}$$

Note that the $(CdA)_{OX}$ values will be identified during cold-flows and hot-fires, and the oxidizer density ρ_{OX} will be obtain by using Liquid Oxygen proprieties, and a pressure transducer / thermocouple combo such that $\rho_{OX} = f(P_{inj,OX}^m, T_{OX}^m)$. Since the oxidizer throttle valve is directly upstream of the injector, with minimal line distance to and from it (and thus negligible friction losses), we make the relation that the valve's downstream pressure is equal to the injector pressure. We now have two options to solve for the flow coefficient target for the valve. Since we don't have a PT upstream of the valve, we have to rely on the tank pressure measurement and subtract an estimate for our line friction pressure drop to get the upstream valve pressure. This is a good "first guess" for initial testing, and useful during low pressure waterflows for verification. Using this & the valve equation (along with substitutions $Q = \frac{\dot{m}}{\rho}$ and $SG = \frac{\rho}{\rho_{H_2O}}$, we can derive a C_v target:

$$
\begin{aligned}
C_v &= Q\sqrt{\frac{SG}{P_{up} - P_{dw}}} \\
C_v &= \dot{m}\sqrt{\frac{1}{\rho\rho_{H_2O}(P_{up} - P_{dw})}} \\
C_{v,OX}^{cmd} &= \dot{m}_{OX}^{cmd} \cdot \sqrt{\frac{1}{\rho_{OX}\rho_{H_2O}(P_{tank}^{m} - \Delta P_{fric} - P_{inj,OX}^{cmd})}}
\end{aligned}
\tag{1.5}
$$

However a more reliable solution comes from multiple testing runs, and obtaining a map of the following form, which removes our assumptions and is overall just cleaner.

$$
C_{v,OX}^{cmd} = f(\Delta P_{inj,OX}^{cmd} P_{tank}^{m}) \tag{1.6}
$$

Since this calculation step includes significant uncertainty & reliance on characterized data, we include a small feedback trim to the flow coefficient target by accumulating our chamber pressure error:

$$
\begin{aligned}
\varepsilon_1 &= P_c^{cmd} - P_c^{m} \\
\delta C_{v,OX} &= K_{OX} \cdot \int_0^t \varepsilon_1 \; d\tau \\
C_{v,OX}^{cmd} &\rightarrow C_{v,OX}^{cmd} + \delta C_{v,OX}
\end{aligned}
\tag{1.7}
$$

We then use our flow coefficient to valve angle characterization, obtained from both waterflows and cold-flows, to obtain a target valve angle:

$$
\theta_{OX}^{cmd} = f(C_{v,OX}^{cmd}) \tag{1.8}
$$

This valve angle is then internally tracked by a stepper motor with an absolute encoder on the valve shaft.

1.3 Fuel Circuit

Using our measured oxidizer injector pressures and chamber pressure we can find the pressure drop across the oxidizer injector, & using the orifice equation we used to produce the injector pressure, we can get a massflow estimate for OX, used to then produce a mass-flow for fuel by constraining our mixture ratio:

$$
\begin{aligned}
\Delta P_{inj,OX} &= P_{inj,OX}^{m} - P_c^{m} \\
\dot{m}_{OX}^{cmd} &= (C_d A)_{OX}\sqrt{2\Delta P_{inj,OX} \cdot \rho_{OX}} \\
\dot{m}_{FU}^{cmd} &= \frac{\dot{m}_{OX}^{cmd}}{OF}
\end{aligned}
\tag{1.9}
$$

We can now follow a similar process to the oxidizer to find our target fuel injector pressure, but note that we instead use our measured chamber pressure instead of the commanded, since we're

just trying to react to the oxidizer side.

$$P_{inj,FU}^{cmd} = P_c^m + \frac{(\dot{m}_{FU}^{cmd})^2}{2 \cdot \rho_{OX} \cdot (C_d A)_{FU}^2} \tag{1.10}$$

The flow coefficient targeting for fuel is a little more complex since the fuel runs through regenerative cooling channels before reaching the injector, causing a higher pressure drop which is rougher to predict since it is coupled to the heat transfer from the chamber walls. We will then proceed by obtaining the flow coefficient to injector pressure drop map like for the oxidizer during a cold-flow as a first guess, and update the map during hot-fires.

$$C_{v,FU}^{cmd} = f(\Delta P_{inj,FU}^{cmd} P_{tank}^m) \tag{1.11}$$

Since this calculation step also includes uncertainty, we add another feedback trim to the flow coefficient target by accumulating our fuel injector pressure error:

$$\begin{aligned} \varepsilon_2 &= P_{inj,FU}^{cmd} - P_{inj,FU}^m \\ \delta C_{v,FU} &= K_{_{FU}} \cdot \int_0^t \varepsilon_2 \; d\tau \\ C_{v,FU}^{cmd} &\rightarrow C_{v,FU}^{cmd} + \delta C_{v,FU} \end{aligned} \tag{1.12}$$

We then use our flow coefficient to valve angle characterization, obtained from both waterflows and cold-flows, to obtain a target valve angle:

$$\theta_{FU}^{cmd} = f(C_{v,FU}^{cmd}) \tag{1.13}$$

This valve angle is then internally tracked by a stepper motor with an absolute encoder on the valve shaft.